CAYONO S COUNTERTOP WASHBASIN

- Comfortable spaciousness thanks to the generous interior depth
- Puristic design completed by softly curved surfaces
- Generous radii make cleaning particularly easy
- Elegant solution - overflow cover outside the visible area
- made of KALDEWEI steel enamel

Similar illustration

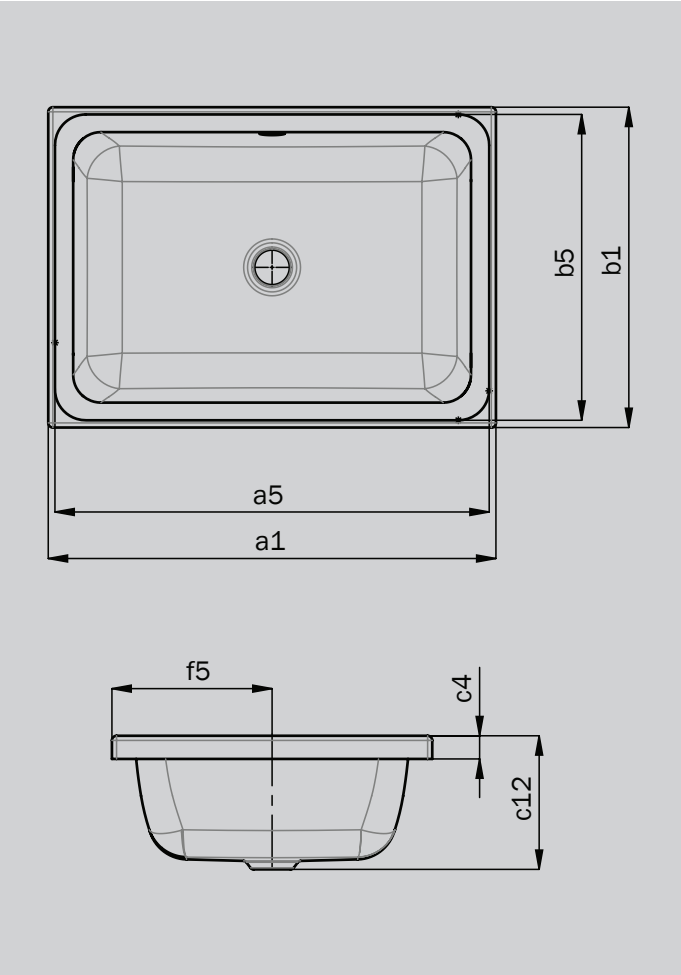

Kaldewei Washbasins succeed the following standards:
IAPMO, ASME A112.19.1, CSA B45.2, UPC, IPC, NPC

Model		3189
External length	a_1	580 mm
Internal length	a_5	562 mm
External width	b_1	415 mm
Internal width	b_5	396 mm
Height of rim	c_4	30 mm
Distance basin surface to bottom edge of waste hole	c_{12}	173 mm
Distance rear edge to centre of waste hole	f_5	208 mm
Net weight		10 kg

KALDEWEI