PURO S
COUNTERTOP WASHBASIN

(HEIGHT OF RIM 4.72 INCH)

- extension of the PURO countertop washbasin by a model without tap deck
- contrasts conventional washbasins with a stylish bowl aesthetic
- individual positioning of the washbasin on the countertop allows perfect combination with a free-standing or wall-mounted tap
- made of KALDEWEI steel enamel
- designed by Anke Salomon

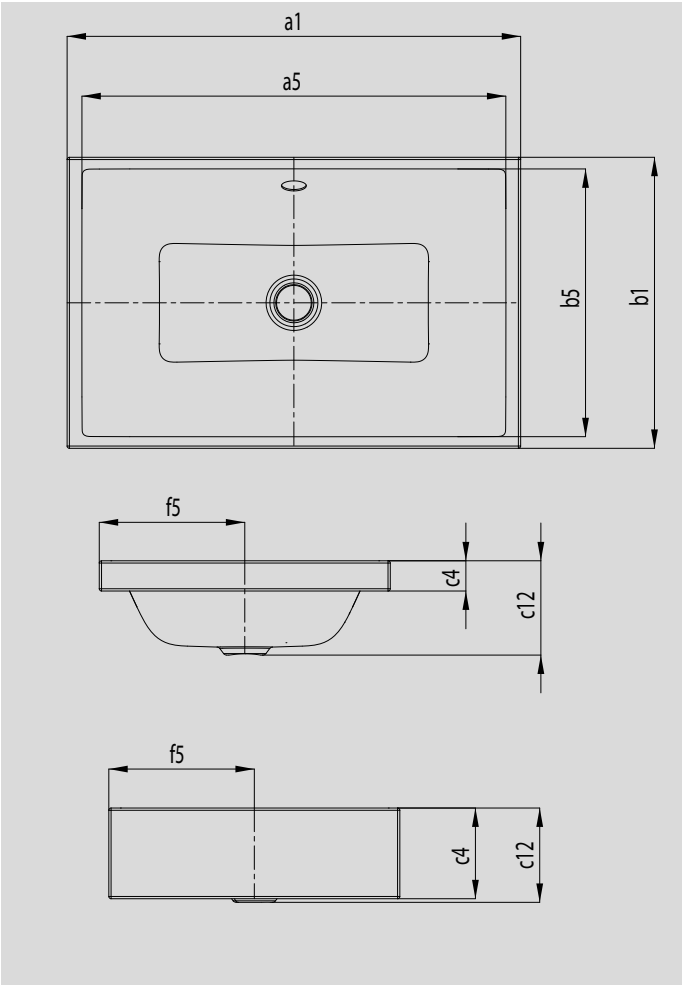

		inch	inch
Model No.		**3175**	**3176**
External length	a1	23.62	35.43
Internal length	a5	22.09	33.84
External width	b1	15.16	15.16
Internal width	b5	13.94	13.94
Height of rim	c4	4.72	4.72
Distance basin surface to bottom edge of waste hole	c12	4.92	4.92
Distance outer edge to centre of waste hole	f5	7.58	7.58
Weight of the enamelled washbasin in lbs		26.46	35.27

Subject to technical alterations, tolerances and errors. Similar illustration.

KALDEWEI